PRODUCTION PROCESS-I

Q.No.1.a. Drew a neat labeled diagram showing the different parts of Capston Lathe. State the function of each part. *10*

Ans:

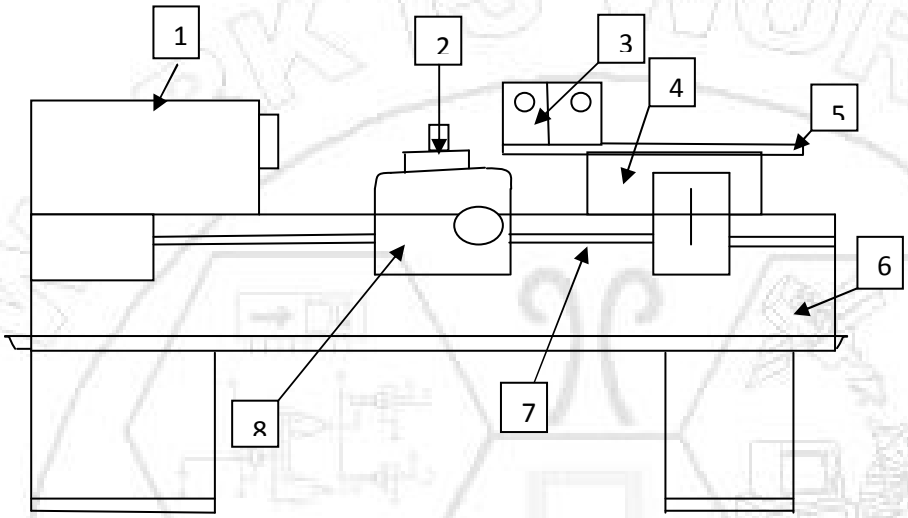

1. Headstock, 2.Cross slide tool post, 3. Hexagonal Turret, 4.Saddle for auxiliary slide, 5.Auxiliary slide, 6.Lathe Bed, 7.Feed rod, 8.Saddle for cross.

1. Headstock: It carries gearing arrangement with various gears to control the speed. Also it carries spindle, work holding device i.e. chuck.

2. Cross slide tool post: for sliding the tool post in longitudinally, the longitudinal movement of tool.

3. Hexagonal Turret: Turret gives position for no. of tools.

4. Saddle for auxiliary slide: Saddle bridges gap between two bed ways & top face is accurately machined to provide bearing surface for auxiliary slide.

5. Auxiliary slide: It carries Hexagonal Turret.

6. Lathe Bed: Bed is designed to ensure strength, rigidity, permanency of alignment under heavy duty services.

7. Feed rod: feeding rod is provided for feeding purpose.

8. Saddle for cross: The hexagonal turret is mounted directly on saddle & the whole unit moves back & forth.

b. Discuss Laser Beam Welding along with its advantages, disadvantages, application. *10*

Ans: Lasers are devices which are capable of generating a very intense beam of optical radiation. The word Laser is a short form of Light Amplification by Stimulated Emission of Radiation. A CO2 laser pumped with 500W emits far infra red light & develops a peak energy density (80 kW/mm2) yet the heat affected zone is only 0.05 to 0.1 mm wide. Oxygen blown on the surface of the metals reduces the heat reflection & increases material removal rates by oxidation, inert gas increases heat transfer for nonmetals.

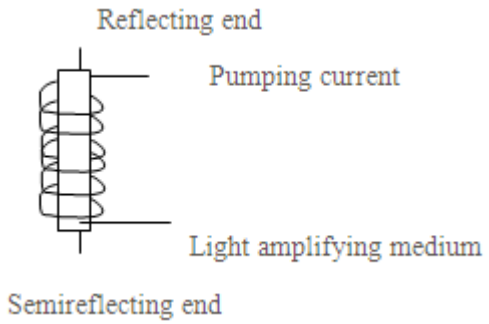

Advantages:

1. Accurate work
2. Vacuum is not necessary

Disdvantages:

1. It is useful only for microwelding,
2. Costly process.

Application:

1. Welding of thin gauge metals,
2. Welding of small wires & electronic devices.

Q.No.2. a. List the different NDT methods. Explain Ultrasonic method at inspection. *08*

Different NDT methods

1. Visual Examination
2. Radiographic Test
3. Ultrasonic test
4. Liquid penetrant test
5. Magnetic particle test

Ultrasonic test

It relies upon transmission & reflection of ultrasonic beams or waves of frequencies between 100kHz and 25 MHz.

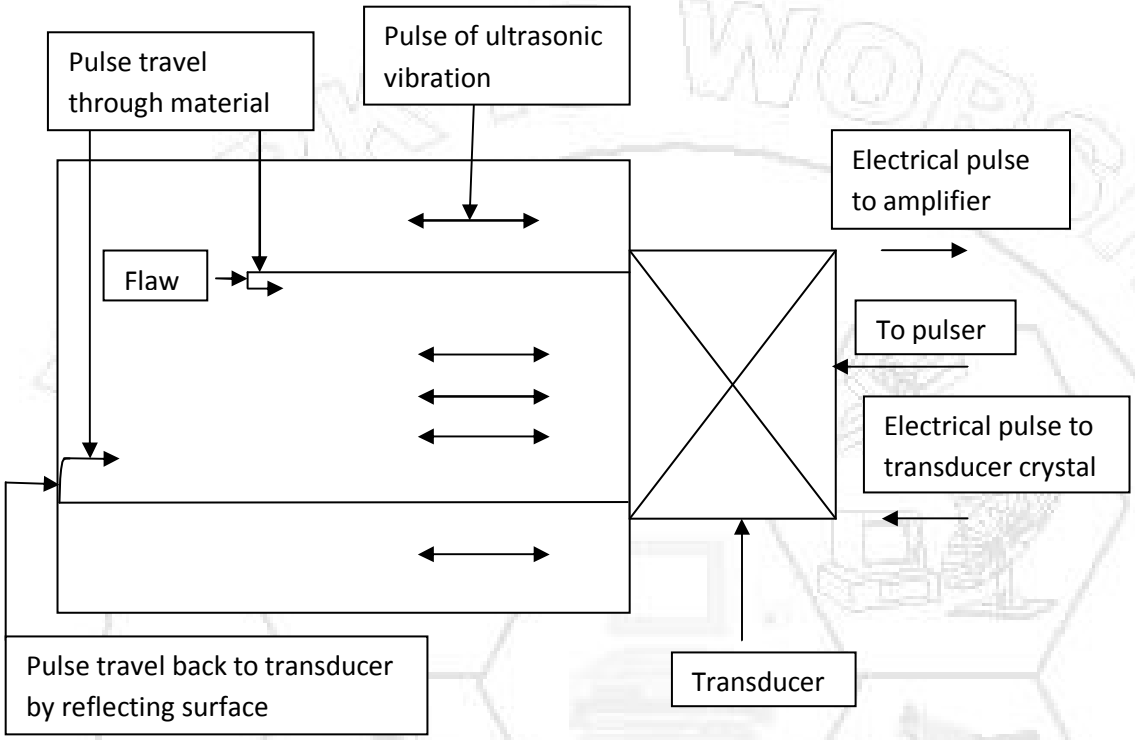

b. What is Powder metallurgy? Why gears are manufactured by Powder metallurgy? List few advantages, disadvantages and application. *10*

Ans: Powder metallurgy is a forming and fabrication technique consisting of three major processing stages. First, the primary material is physically powdered, divided into many small individual particles. Next, the powder is injected into a mold or passed through a die to produce a weakly cohesive structure (via cold welding) very near the dimensions of the object ultimately to be manufactured. Pressures of 10-50 tons per square inch are commonly used. Also, to attain the same compression ratio across more complex pieces, it is often necessary to use lower punches as well as an upper punch. Finally, the end part is formed by applying pressure, high temperature, long setting times (during which self-welding occurs), or any combination thereof.

Why Powder Metal gears:
Compared to a conventional gear manufacturing process, the powder metallurgy process has the

ability to offer several distinct advantages. This is particularly visible, with gears made out of powder metallurgy eliminating the need for machining and there is no scrap losses either. There is easy provision to form internal configurations (splines, keys, keyways). These are formed simultaneously with the gear profile while the molding process is on. Following process advantages are associated with powder metal gear manufacture:

- Considerable economy in mass production
- Uniformity in the features and dimensions of parts
- Manufacturing of multilevel gears
- Close monitoring of density
- Reduction and even elimination of the need for secondary operations
- Improved surface finishes
- Self-lubricating ability
- Noise reduction due to sound-dampening qualities
- Weight reduction

Advantages of powder metallurgy process.
1) A combination of metals and non metals powdered parts can be manufactured.
2) High Dimensional accuracy is achieved.
3) Fine Surface finish is achieved
4) Porous parts can be produced which is not possible by any other method.

5) Highly qualified or skilled person is not required for handling powder metallurgy method

Disadvantages of powder metallurgy process

1) High tooling costs.
2) Expensive raw materials (powders).
3) Relatively long parts are difficult to manufacture.
4) Difficult storing and handling of powders (degradation with time and fire hazard with particular metallic powders).

Application:

Powder Metallurgy products are today used in a wide range of industries, from automotive and aerospace applications to power tools and household appliances.

c. Explain weldability. *02*

Ans: The weldability, also known as join ability, of a material refers to its ability to be welded. Many metals and thermoplastics can be welded, but some are easier to weld than others. It greatly influences weld quality and is an important factor in choosing which welding process to use.

Q.No.3. a. Explain NC, CNC, & DNC machines with block diagram. *08*

Ans: 1) NC- NC can be defined as the control of operations of machine tools by a series of coded instructions called program. The program consists of mainly alphanumerical characters (numbers and letters). The sequence of events is preplanned and predictable.

The functions normally performed by an operator in conventional machines are here performed by the NC system. The coded instructions are supplied to the machine in 'blocks' of information. Each block is interpreted by the NC machine as an instruction to perform a single operation. For example. A typical instruction block could command an NC machine to move a spindle relative to the work piece through a stated distance and direction and at stated spindle speed and feed rate. The activities such as starting and stopping of spindle or coolant are done by an operator on conventional machines or are done by the instructions given in the programs in the forms of blocks.

Thus the movement of work and tool and all other operations are controlled by numbers; and hence is the name Numerical Control.

• Operational Sequence in Traditional NC Part Programming

Numerical control program is a set of instruction blocks which commands an NC machine to carry out complete machining of a component or a part; and hence. is known as part program.

Traditional NC machines contain no local intelligence and part programs have to be fed into them manually. usually in the form of punched paper tape. Working from a paper drawing of designed component and from planning sheets. the part program writes out the program blocks for the required machining operations by hand. This is usually done at a location remote from an NC machine. Figure 2 shows the operational sequence in traditional NC part programming:

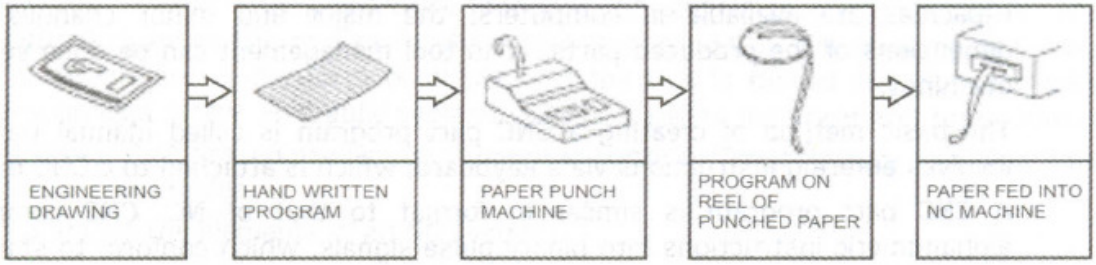

2) CNC: Computer Numerical Control (CNC) contains essential principles of traditional NC. but employs a dedicated computer to perform basic NC functions. The computer is housed within machine control unit and allows part programs to be created via its software. These programs are then stored in the computer's memory.

NC machines are tape controlled machines: whereas, CNCare computer controlled machines. In NC, tape has to be run repeatedly depending on the number of components to be produced.

Also, if there is even a minor change in the design of the component, the tape has to be discarded and a new tape with program has to be produced. NC is a hard wired system without flexibility. The necessary logic and signals are obtained by hard electronic components: whereas. CNCis a flexible or a soft wired system. Since, flexibility and storage capacities are available in computers. The major and minor changes in a program, in dimensions of the produced parts, or in tool management can be done very rapidly with CNC machines.

The basic method of creating a CNC part program is called Manual Data Input (MOl) and involves entering instructions via a keyboard, which is attached to a CNCmachine.

A CNC part program is similar in format to that of NC. CNC computer converts the alphanumeric instructions into binary pulse signals, which conform to standard ASCII. ISO.or EIA NCcodes.

3) DNC:

Direct Numerical Control. The main functions of the DNC system are:

-To control the NC/CNC machines.

- To use central computer for storing and editing programs for all machine tools connected to it.

-To transfer the stored programs to the connected machines, on demand, in real time.

-To maintain the information system. The data like number of parts machined, tool usage, actual cutting time is stored and used subsequently. for scheduling of jobs on different machines.

- To integrate CAD with CAM by using common data base.

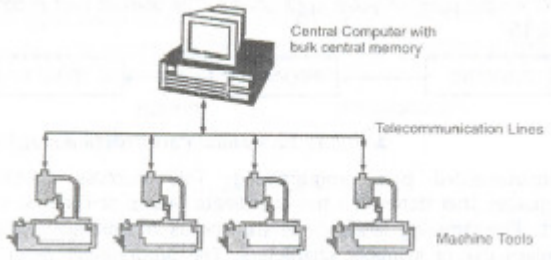

DNC

b. Enlist different types of patterns. Sketch & explain any three patterns. *08*

Ans: The Pattern:

In sand casting a few different types of patterns may be used in the process.

Solid Pattern:

This is a one piece pattern representing the geometry of the casting. It is an easy pattern to manufacture, but determining the parting line between cope and drag is more difficult for the foundry worker.

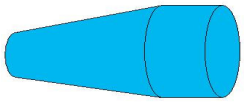

SOLID PATTERN

Split Pattern:

The split pattern is comprised of two separate parts that when put together will represent the geometry of the casting. When placed in the mold properly the plane a which the two parts are assembled should coincide with the parting line of the mold. This makes it easier to manufacture a pattern with more complicated geometry. Also mold setup is easier since the patterns placement relative to the parting line of the mold is predetermined.

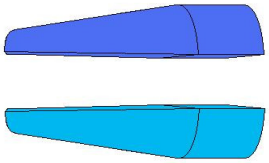

SPLIT PATTERN

Match Plate Pattern:

The match plate pattern is typically used in high production industry runs for casting manufacture. A match plate pattern is a two piece pattern representing the casting, and divided at the parting line, similar to the split pattern. In the match plate pattern, however, each of the parts are mounted on a plate. The plates come together to assemble the pattern for the casting process. The match plate pattern is more proficient and makes alignment of the pattern in the mold quick and accurate.

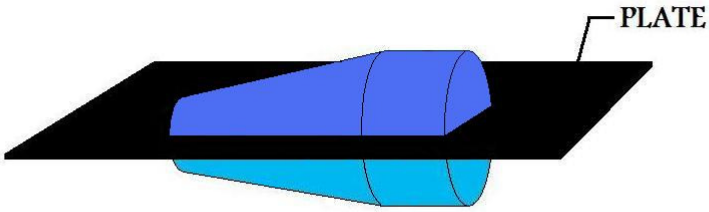

MATCH PLATE PATTERN

Cope and Drag Pattern:

The cope and drag pattern is also typical in casting manufacture for high production industry runs. The cope and drag pattern is the same as the match plate pattern in that it is a two piece pattern representing the casting and divided at the parting line. Each of the two halves are mounted on a plate for easy alignment of the pattern and mold. The difference between the cope and drag pattern and the match plate pattern is that in the match plate pattern the two halves are mounted together, where as in the cope and drag pattern the two halves are separate. The cope and drag pattern enables the cope section of the mold and the drag section of the mold to be created separately and latter assembled before the pouring of the casting.

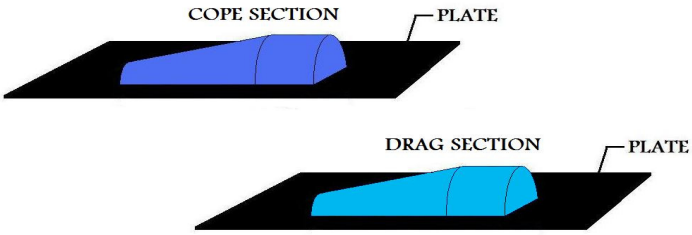

COPE AND DRAG PATTERN

In manufacturing industry a gating system (not shown) is often incorporated as part of the pattern particularly for a cope and drag pattern. Patterns can be made of different materials, and the geometry of the pattern must be adjusted for shrinkage, machine finish, and distortion. Pattern basics are covered in detail in the patterns section.

c. Write a note on welding defects. *04*

Ans: Welding Defects

The defects in the weld can be defined as irregularities in the weld metal produced due to incorrect welding parameters or wrong welding procedures or wrong combination of filler metal and parent metal.

Weld defect may be in the form of variations from the intended weld bead shape, size and desired quality. Defects may be on the surface or inside the weld metal. Certain defects such as cracks are never tolerated but other defects may be acceptable within permissible limits. Welding defects may result into the failure of components under service condition, leading to serious accidents and causing the loss of property and sometimes also life.

Various welding defects can be classified into groups such as cracks, porosity, solid inclusions, lack of fusion and inadequate penetration, imperfect shape and miscellaneous defects.

1. Cracks

Cracks may be of micro or macro size and may appear in the weld metal or base metal or base metal and weld metal boundary. Different categories of cracks are longitudinal cracks, transverse cracks or radiating/star cracks and cracks in the weld crater. Cracks occur when localized stresses exceed the ultimate tensile strength of material. These stresses are developed due to shrinkage during solidification of weld metal.

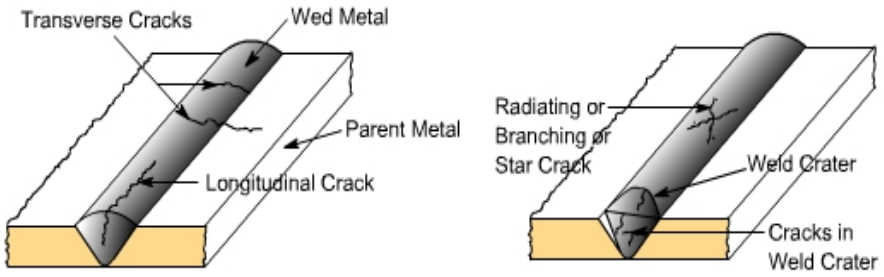

Fig 13.1: Various Types of Cracks in Welds

Cracks may be developed due to poor ductility of base metal, high sulpher and carbon contents, high arc travel speeds i.e. fast cooling rates, too concave or convex weld bead and high hydrogen contents in the weld metal.

2. Porosity : Porosity results when the gases are entrapped in the solidifying weld metal. These gases are generated from the flux or coating constituents of the electrode or shielding gases used during welding or from absorbed moisture in the coating. Rust, dust, oil and grease present on the surface of work pieces or on electrodes are also source of gases during welding. Porosity may be easily prevented if work pieces are properly cleaned from rust, dust, oil and grease.Futher,

porosity can also be controlled if excessively high welding currents, faster welding speeds and long arc lengths are avoided flux and coated electrodes are properly baked.

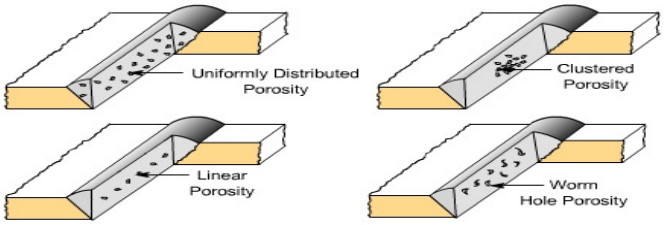

Fig 13.2: Different Forms of Porosities

3. Solid Inclusion : Solid inclusions may be in the form of slag or any other nonmetallic material entrapped in the weld metal as these may not able to float on the surface of the solidifying weld metal. During arc welding flux either in the form of granules or coating after melting, reacts with the molten weld metal removing oxides and other impurities in the form of slag and it floats on the surface of weld metal due to its low density. However, if the molten weld metal has high viscosity or too low temperature or cools rapidly then the slag may not be released from the weld pool and may cause inclusion. Slag inclusion can be prevented if proper groove is selected, all the slag from the previously deposited bead is removed, too high or too low welding currents and long arcs are avoided.

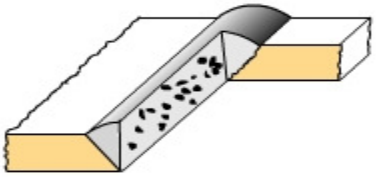

Fig 13.3: Slag Inclusion in Weldments

4. Lack of Fusion and Inadequate or incomplete penetration: Lack of fusion is the failure to fuse together either the base metal and weld metal or subsequent beads in multipass welding because of failure to raise the temperature of base metal or previously deposited weld layer to melting point during welding. Lack of fusion can be avoided by properly cleaning of surfaces to be welded, selecting proper current, proper welding technique and correct size of electrode.

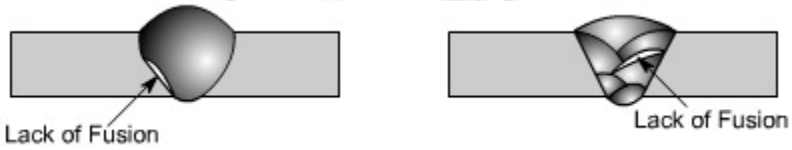

Fig 13.4: Types of Lack of Fusion

Incomplete penetration means that the weld depth is not upto the desired level or root faces have not reached to melting point in a groove joint. If either low currents or larger arc lengths or large root face or small root gap or too narrow groove angles are used then it results into poor penetration.

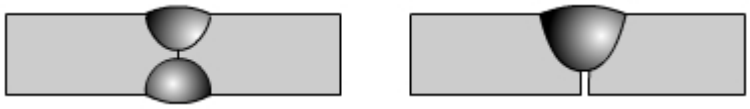

Fig 13.5: Examples of Inadequate Penetration

5. Imperfect Shape : Imperfect shape means the variation from the desired shape and size of the weld bead.

During undercutting a notch is formed either on one side of the weld bead or both sides in which stresses tend to concentrate and it can result in the early failure of the joint. Main reasons for undercutting are the excessive welding currents, long arc lengths and fast travel speeds.

Underfilling may be due to low currents, fast travel speeds and small size of electrodes. Overlap may occur due to low currents, longer arc lengths and slower welding speeds.

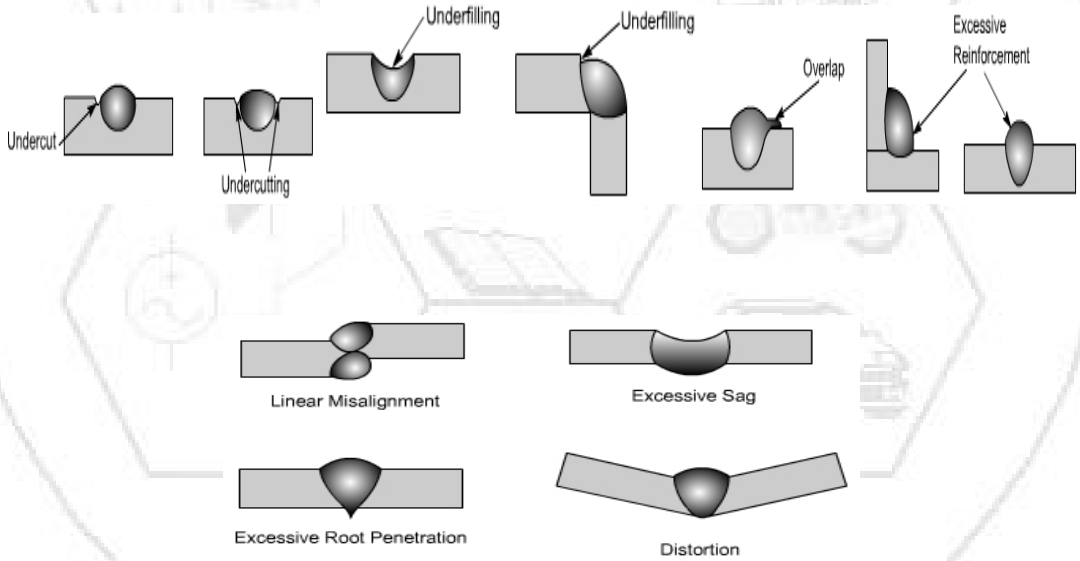

Fig 13.6: Various Imperfect Shapes of Welds

Excessive reinforcement is formed if high currents, low voltages, slow travel speeds and large size electrodes are used. Excessive root penetration and sag occur if excessive high currents and slow travel speeds are used for relatively thinner members. Distortion is caused because of shrinkage occurring due to large heat input during welding.

6. Miscellaneous Defects : Various miscellaneous defects may be multiple arc strikes i.e. several arc strikes are one behind the other, spatter, grinding and chipping marks, tack weld defects, oxidized surface in the region of weld, unremoved slag and misalignment of weld beads if welded from both sides in butt welds.

Q.No.4. a. Sketch & explain drill spindle assembly in drilling machine. 08

Ans:

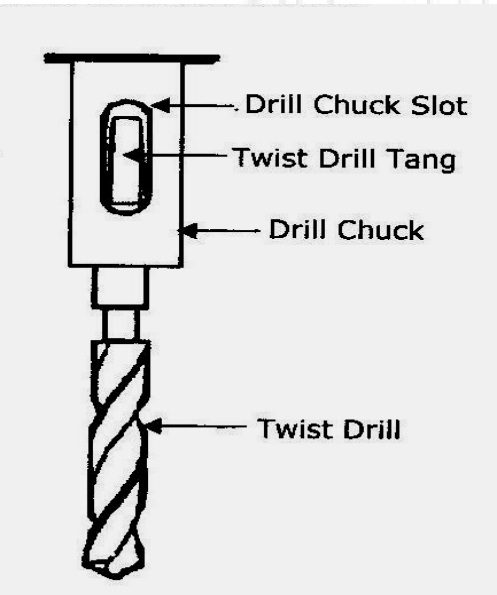

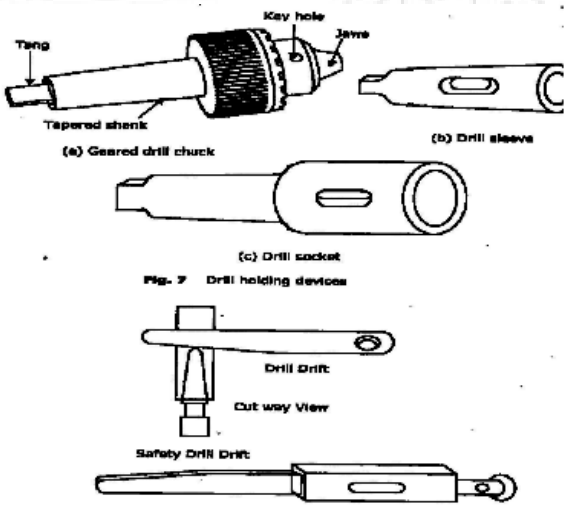

Fig. 8 Drill Drift

Drill fixed to a spindle

Tool holding devices

Fig. and Fig. shows the different work holding and drill drift device. The different methods used for holding drill in a drill spindle are

- By directly fitting in the spindle hole.
- By using drill sleeve
- By using drill socket
- By using drill chuck

b. Give complete classification of shaper, planer, slotter. *04*

Ans: Types of Shaper

According to the mechanism used to give the motion to ram:
1) Crank type, 2) Geared type, 3) Hydraulic type.
According to the position & travel of arm
1) Horizontal, 2) Vertical, 3) Travelling head type
According to the type of cutting stroke
1) Push type, 2) Draw type.

Types of Planer:
1) Double housing planer
2) Open side planer
3) Pit planer
4) Edge or plate planer
5) Divided table planer
Types of slotter
1) Puncher slotter
2) Precision slotter

c. *Sketch & explain crank & slotted link mechanism in shaper.* *08*

Ans: A shaper operates by moving a hardened cutting tool backwards and forwards across the workpiece. On the return stroke of the ram the tool is lifted clear of the workpiece, reducing the cutting action to one direction only.

The workpiece mounts on a rigid, box-shaped table in front of the machine. The height of the table can be adjusted to suit this workpiece, and the table can traverse sideways underneath the reciprocating tool, which is mounted on the ram. Table motion may be controlled manually, but is usually advanced by automatic feed mechanism acting on the feedscrew. The ram slides back and forth above the work. At the front end of the ram is a vertical tool slide that may be adjusted to either side of the vertical plane along the stroke axis. This tool-slide holds the *clapper box* and tool post, from which the tool can be positioned to cut a straight, flat surface on the top of the workpiece. The tool-slide permits feeding the tool downwards to deepen a cut. This adjustability, coupled with the use of specialized cutters and tool holders, enable the operator to cut internal and external gear tooth profiles, splines, dovetails, and keyways.

The ram is adjustable for stroke and, due to the geometry of the linkage, it moves faster on the return (non-cutting) stroke than on the forward, cutting stroke. This action is via a *slotted link* or Whitworth link.

A crank is an arm attached at right angles to a rotating shaft by which reciprocating motion is imparted to or received from the shaft. It is used to change circular into reciprocating motion, or reciprocating into circular motion. The arm may be a bent portion of the shaft, or a separate arm attached to it. Attached to the end of the crank by a pivot is a rod, usually called a connecting rod. The end of the rod attached to the crank moves in a circular motion, while the other end is usually constrained to move in a linear sliding motion, in and out. The term often refers to a human-

powered crank which is used to manually turn an axle, as in a bicycle crankset or a brace and bit drill. In this case a person's arm or leg serves as the connecting rod, applying reciprocating force to the crank. Often there is a bar perpendicular to the other end of the arm, often with a freely rotatable handle on it to hold in the hand, or in the case of operation by a foot (usually with a second arm for the other foot) with a freely rotatable pedal.

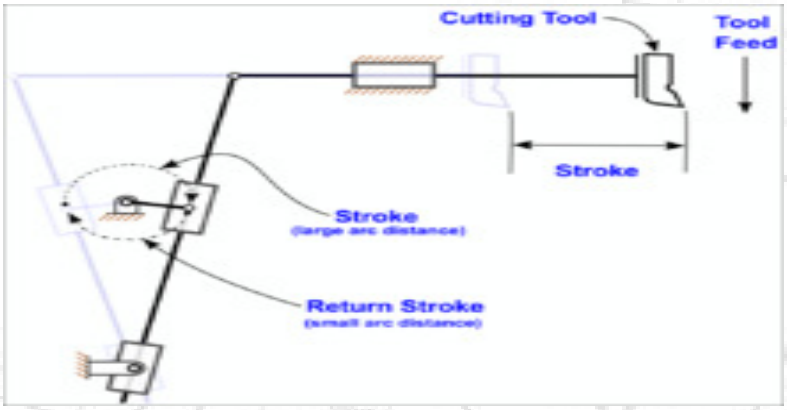

Slotted Link Quick Return Shaper Drive Mechanism - The slotted link quick returns mechanism.

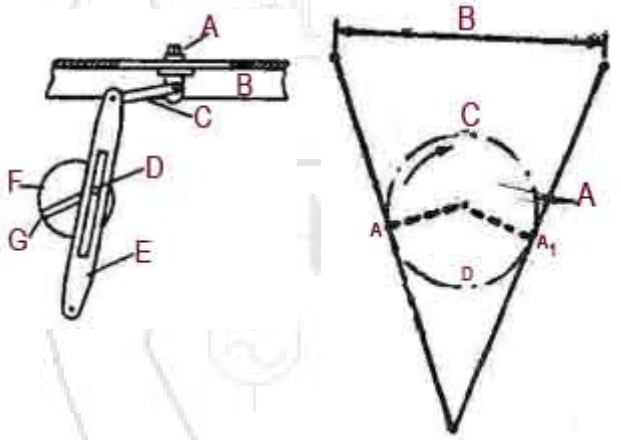

Slotted link mechanism Principle of mechanism

A - Clamping nut
B - Ram
C - Link D
D - Crankpin A
E - Slotted crank B
F - Bull Wheel
G - Glot

A - Path of crankpin
B - Length of stroke
C - Cutting stroke
D - Idle or return

Q.No.5. a. Sketch an upright milling machine. State the functions of some important parts. *08*

Ans: In a Upright milling machine the spindle axis is vertically oriented and spindle holds the milling cutters and rotates on its axis. The spindle can generally be extended (or the table can be raised/lowered. giving the same effect) to allow plunge cuts and drilling. There are two subcategories of vertical mills: bed-mill and turret mill. Similar to a ubiquitous Bridgeport. Turret mills are generally smaller and more versatile than bed-mills. In a turret mill. The spindle remains stationary during cutting operations and the table is moved both perpendicular and parallel to the spindle axis to perform cutting operations. In a bed-mill However the table moves only perpendicular to the spindle axis. While the spindle itself moves parallel to its own axis. It is also important to note that a lighter machine is called a mill-drill. Mill-drill is quite popular with hobbyists due to its small size and lower price. These are frequently of lower quality than other types of machines. Figure shows the Upright milling machine:

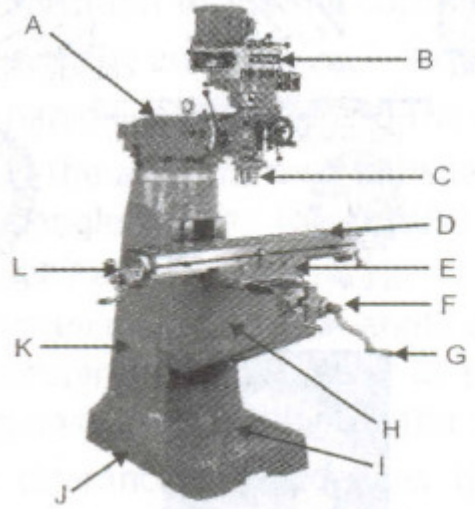

A RAM
B VERTICAL HEAD
C QUILL
D TABLE
E SADDLE
F CROSSFEED HANDLE
G VERTICAL FEED CRANK
H KNEE

b. Enlist different types of non-conventional machining processes. Explain any one of them. *08*

Ans: Mechanical Machining

I. Abrasive Jet Machining
II. Ultrasonic Mchining

1. Chemical

I. Chemical Machining

2. Electrochemical

I. Electrochemical Matching
II. Electrochemical Grinding

3. Thermoelectric

I. Ion Beam Machining
II. Plasma Arc Machining
III. Electron Beam Machining

Electrochemical Machining (ECM) is the controlled removal of metal by anodic dissolution in an electrolytic cell in which the workpiece is the anode and the tool is cathode. The electrolyte is pumped through the gap between the tool and the workpiece, while direct current is passed through the cell, to dissolve metal from the work piece.

ECM is widely used in machining of jobs involving intricate shapes and to machine very hard or tough materials those are difficult or impossible to machine by conventional machining. It is now routinely used for the machining of aerospace components, critical deburring, Fuel injection system components, ordnance components etc. ECM is also most suitable for manufacturing various types of dies and moulds.

The job to be machined is fixed in the vice, in the machining chamber, that is sealed for any leakage of electrolyte and is corrosion resistant, having window to see machining operation. Tool is brought near the job with the help of press buttons provided on the control panel and table lifting arrangement, maintaining particular gap. The tool progresses vertically by servo motor and is governed by micro controller based programmable drive. Then the process parameters are set like tool feed rate, voltage, timer, auto/manual mode, etc.
The process is started in the presence of an electrolyte flow that is circulated with the help of special pump filling the gap between anode (job) and cathode (tool). Electrolyte flow is adjusted by flow control valve. The machining is achieved by sinking of tool forming its replica. During the operation sophisticated control panel takes care of any damage to the machine by over load and short circuit protections. After desired time interval hooter gives an indication of completion

of the time / process. The small machining area with given power supply an be machined within 30 mins to one hour.

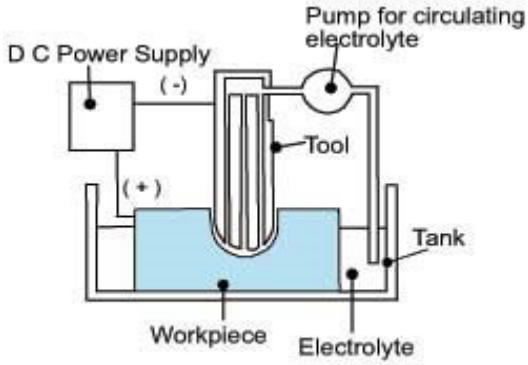

Electro-chemical Machining

c) Sketch & explain a strickle. 04

Strickles are frequently used with core boxes to obtain shapes of large workpieces. They work from a guide held against parallel side of core box. A considerable amount of time in building up & shaping is saved by their use.

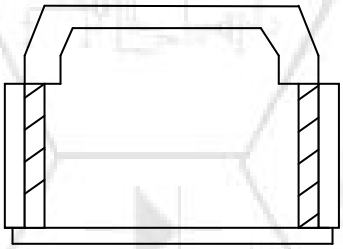

Q.No.6.a. Give the complete classification of grinding machines. Explain internal & external centerless type of grinder. *10*

Ans: Main types are-

1) Rough Grinder
2) Precision Grinder

A. Rough Grinder
1) Floor stand & bench grinders
2) Portable & flexible shaft grinders
3) Swing frame grinders
4) Abrasive belt grinders

B. Precision Grinder
1) Cylindrical grinders

a) Plain grinders
b) Universal grinders
c) Centreless

2) Internal Grinders
a) Chucking
I. Plain
II. Universal
b) Planetary
c) Centreless
3) Surface grinders
a) Reciprocating table
I. Horizontal spindle
II. Verticle spindle
b) Rotating table
I. Horizontal spindle
II. Verticle spindle
4) Tool & cutter grinders
a) Universal
b) Special
5) Special grinding machine

Internal centreless grinder

A type of grinding in which cylindrical parts are not held between centers but are supported on a work rest blade and rotated.

This machine is used for grinding cylindrical and tapered holes in cylindrical parts (e.g. cylindrical liners, various bushings etc). The workpiece is rotated between supporting roll, pressure roll and regulating wheel and is ground by the grinding wheel as illustrated in Fig.

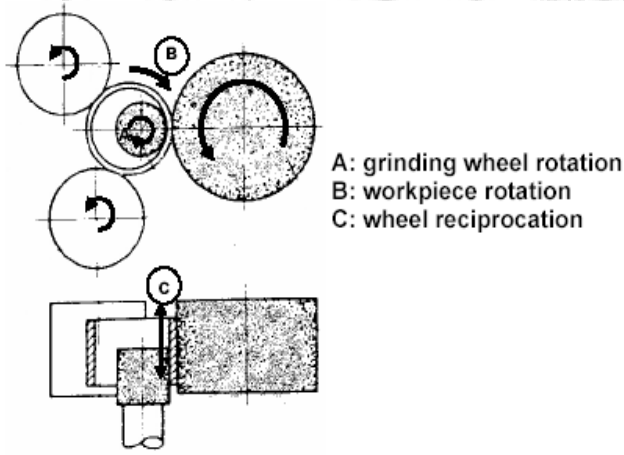

External centreless grinder

This grinding machine is a production machine in which out side diameter of the workpiece is ground. The workpiece is not held between centres but by a work support blade. It is rotated by means of a regulating wheel and ground by the grinding wheel.In through-feed centreless grinding, the regulating wheel revolving at a much lower surface speed than grinding wheel controls the rotation and longitudinal motion of the workpiece. The regulating wheel is kept slightly inclined to the axis of the grinding wheel and the workpiece is fed longitudinally as

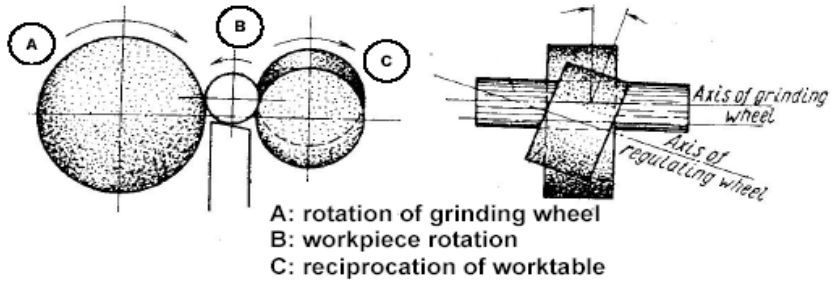

Fig.29.14: Centreless through feed grinding

A: rotation of grinding wheel
B: workpiece rotation
C: reciprocation of worktable
Centreless through feed grinding
Parts with variable diameter can be ground by Centreless infeed grinding as shown in Fig. (a). The operation is similar to plunge grinding with cylindrical grinder.
End feed grinding shown in Fig. (b) is used for workpiece with tapered surface.
Fig. Centreless (a) infeed and (b) end feed grinding

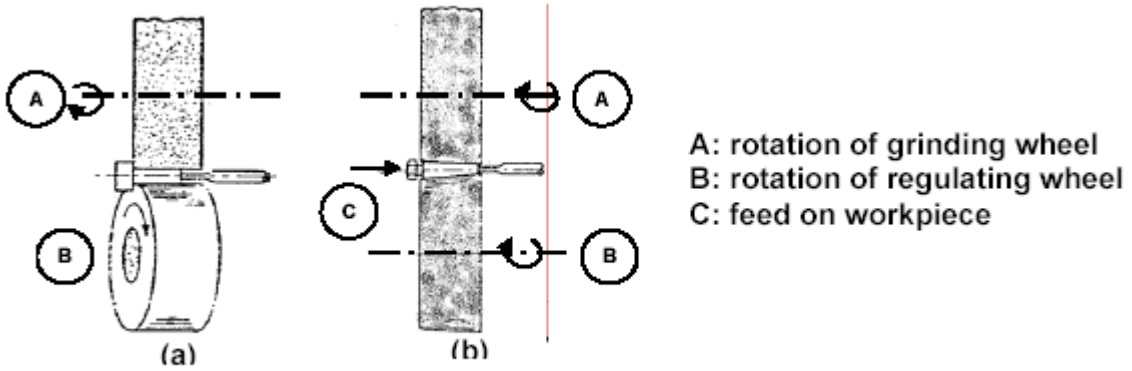

***Fig. 29.15** Centreless (a) infeed and (b) end feed grinding*

A: rotation of grinding wheel
B: rotation of regulating wheel
C: feed on workpiece
The grinding wheel or the regulating wheel or both require to be correctly profiled to get the required taper on the workpiece.

b. *Enlist the complete drilling operations. Explain any four.* *10*

Ans: Drilling operations

Operations that can be performed in a drilling machine are

- Drilling
- Reaming
- Boring
- Counter boring
- Countersinking
- Tapping

Drilling:

It is an operation by which holes are produced in solid metal by means of revolving tool called 'Drill'. Fig. 9 shows the various operations on drilling machine.

Reaming:

Reaming is accurate way of sizing and finishing the pre-existing hole.

Multi tooth cutting tool. Accuracy of ±0.005mm can be achieved

Boring:

Boring is a process of enlarging an existing hole by a single point cutting tool. Boring operation is often preferred because we can correct hole size, or alignment and can produce smooth finish. Boring tool is held in the boring bar which has the shank. Accuracy of ±0.005mm can be achieved.

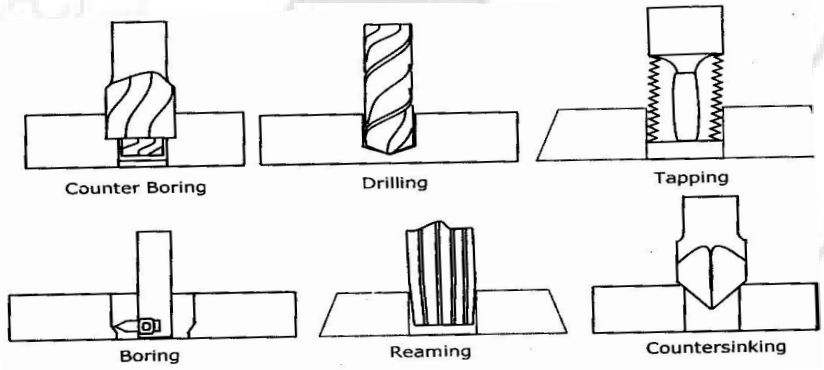

Various operations on drilling machine

Counter Bore:-This operation uses a pilot to guide the cutting action to accommodate the heads of bolts. Fig. illustrates the counter boring, countersunk and spot facing processes.

Countersink:- Special angled cone shaped enlargement at the end of the hole to accommodate the screws. Cone angles of 60°, 82°, 90°, 100°, 110°, 120°

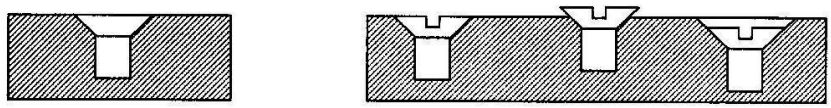

a b

Countersunk hole

Counterbored hole Spot faced hole

Counter boring, countersunk and spot facing

Tapping:-

Tapping is the process by which internal threads are formed. It is performed either by hand or by machine. Minor diameter of the thread is drilled and then tapping is done. Fig. 11 show the tapping processes.

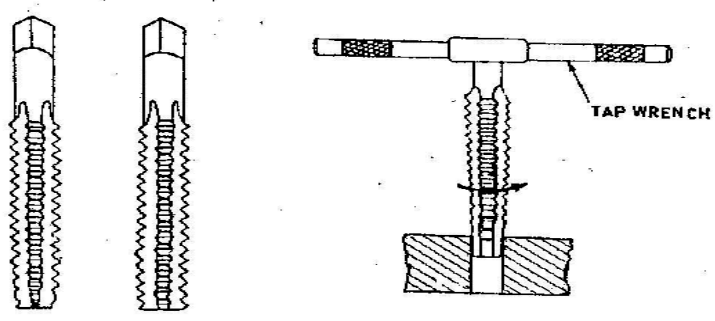

Intermediate Finisher

Hand Taps

Hand Tapping using Tap Wrench

Fig. Hand taps and tapping process using tap wrench

Q.No.7. Write short notes on any three of the following *20*

1. Cupola furnace

Ans: A Cupola or Cupola furnace is a melting device used in foundries. The cupola can be made almost any practical size. The size of a cupola is expressed in diameters. The overall shape is cylindrical

and the equipment is arranged vertically, usually supported by four legs. The overall look is similar to a large smokestack.

The bottom of the cylinder is fitted with doors which swing down and out to 'drop bottom'. The top where gases escape can be open or fitted with a cap to prevent rain from entering the cupola. To control emissions a cupola may be fitted with a cap that is designed to pull the gases into a device to cool the gasses and remove particulate matter.

The shell of the cupola, being usually made of steel, has refractory brick and refractory patching material lining it. The bottom is lining in a similar manner but often a clay and sand mixture may be used, as this lining is temporary. The bottom lining is compressed or 'rammed' against the bottom doors.

To begin a production run, called a 'cupola campaign' the furnace is filled with layers of coke and ignited with torches. Some smaller cupolas may be ignited with wood to start the coke burning. When the coke is ignited, air is introduced to the coke bed through ports in the sides called tuyeres.

When the coke is very hot, solid pieces of metal are charged into the furnace through an opening in the top. The metal is alternated with additional layers of fresh coke. Limestone is added to act as a flux. As the heat rises within the stack the metal is melted. It drips down through the coke bed to collect in a pool at the bottom, just above the bottom doors. A thermodynamic reaction takes place. The carbon in the coke combines with the oxygen in the air to form carbon monoxide. The carbon monoxide further burns to form carbon dioxide. Some of the carbon is picked up by the falling droplets of molten steel and iron which raises the carbon content of the iron. Silicon carbide and ferromanganese briquets may also be added to the charge materials. The silicon carbide dissociates and carbon and silicon enters into the molten metal. Likewise the ferromanganese melts and is combined into the pool of liquid iron in the 'well' at the bottom of the cupola.

The operator of the cupola, the cupola tender, observes the amount of iron rising in the well of the cupola. When the metal level is sufficiently high, the cupola tender opens the tap hole to let the metal flow into a ladle or other container to hold the molten metal. When enough metal is drawn off the tap hole is plugged with a refractory plug.

The cupola tender observes the iron through the sight glass for signs of slag formation, which is normal. Most slags will rise to the top of the pool of iron being formed. A slag tap hole, located higher up on the cylinder, and usually to the rear or side of the iron tap hole, is opened to let the slag flow out. The viscosity is low (with proper fluxing) and the red hot molten slag will flow easily. Sometimes the slag which runs out the slag hole is collected in a small cup shaped tool, allowed to cool and harden. It is fractured and visually examined. With acid refractory lined cupola as a greenish colored slag means the fluxing is proper and adequate.

After the cupola has produced enough metal to supply the foundry with its needs, the bottom is opened, or 'dropped' and the remaining materials fall to the floor between the legs. This material is allowed to cool and subsequently removed. The cupola can be used over and over. A 'campaign' may last a few hours, a day, weeks or even months.

Some cupolas are fitted with cooling jackets to keep the sides cool and with oxygen injection to make the coke fire burn hotter.

Cupolas can be used to melt iron, ni-resist iron and some bronzes

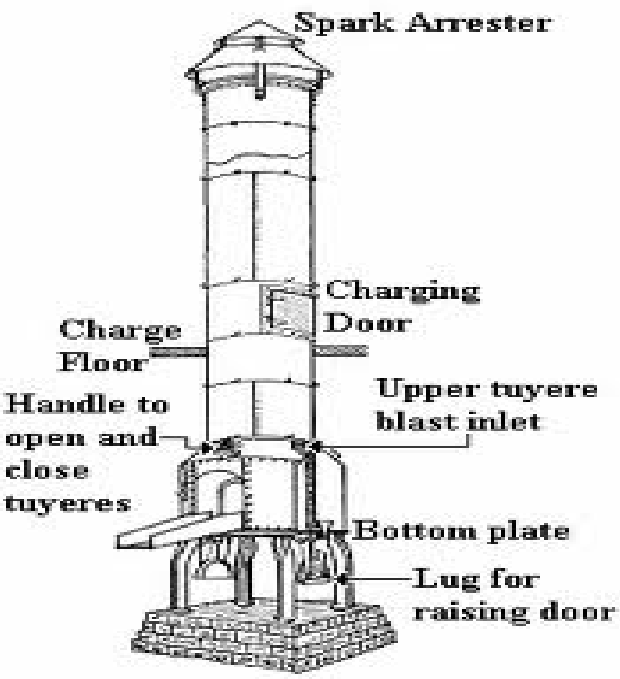

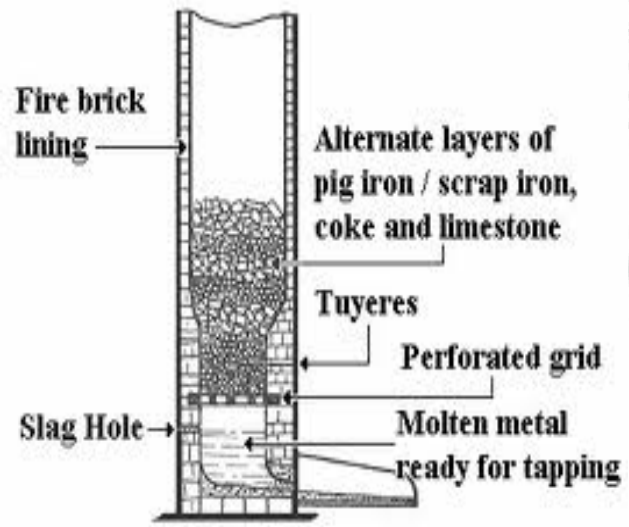

2 *Submerged Arc Welding*

Ans: It requires a continuously fed consumable solid or tubular (flux cored) electrode. The molten weld and the arc zone are protected from atmospheric contamination by being "submerged" under a blanket of granular fusible flux consisting of lime, silica, manganese oxide, calcium fluoride, and other compounds. When molten, the flux becomes conductive, and provides a current path between the electrode and the work. This thick layer of flux completely covers the molten metal thus preventing spatter and sparks as well as suppressing the intense ultraviolet radiation and fumes that are a part of the shielded metal arc welding (SMAW) process.

SAW is normally operated in the automatic or mechanized mode, however, semi-automatic (hand-held) SAW guns with pressurized or gravity flux feed delivery are available. The process is normally limited to the flat or horizontal-fillet welding positions (although horizontal groove position welds have been done with a special arrangement to support the flux). Deposition rates

approaching 100 lb/h (45 kg/h) have been reported — this compares to ~10 lb/h (5 kg/h) (max) for shielded metal arc welding. Although Currents ranging from 300 to 2000 A are commonly utilized, currents of up to 5000 A have also been used (multiple arcs).

Single or multiple (2 to 5) electrode wire variations of the process exist. SAW strip-cladding utilizes a flat strip electrode (e.g. 60 mm wide x 0.5 mm thick). DC or AC power can be used, and combinations of DC and AC are common on multiple electrode systems. Constant voltage welding power supplies are most commonly used; however, constant current systems in combination with a voltage sensing wire-feeder are available.

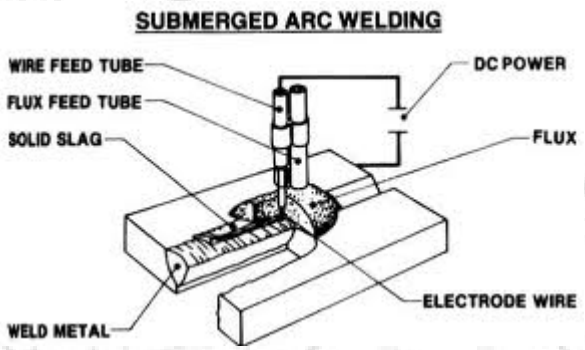

3. *Machining centers*

Ans: Machining centers are of two types

Horizontal & Vertical spindle type. They are operated on three axes, horizontal machine centre X axis , control for table movement left or right. Y axis control for vertical movement for spindle. Z axis control for horizontal movement of spindle. Machine centre are capable of variety of machining operations for this reason a variety of tools are required in machining centre. Thus a machining centre to be efficient must have automatic tool changing. Work part positioning and pallet shuttling apart from other CNC function. Most of the Machining centers have automatic tool changers in angle double gripping form with retractable gripping fingers for simultaneous insertion & removal of tools in spindle & tool magazine. Tool changing follows similar pattern in sequence.

4. *Core boxes*

Ans: To produce cavities within the casting—such as for liquid cooling in engine blocks and cylinder heads—negative forms are used to produce cores. Usually sand-molded, cores are inserted into the casting box after removal of the pattern. Whenever possible, designs are made that avoid the use of cores, due to the additional set-up time and thus greater cost.

With a completed mold at the appropriate moisture content, the box containing the sand mold is then positioned for filling with molten metal—typically iron, steel, bronze, brass, aluminium, magnesium alloys, or various pot metal alloys, which often include lead, tin, and zinc. After filling with liquid metal the box is set aside until the metal is sufficiently cool to be strong. The sand is then removed. With a completed mold at the appropriate moisture content, the box containing the sand mold is then positioned for filling with molten metal—typically iron, steel, bronze, brass, aluminium, magnesium alloys, or various pot metal alloys, which often include lead, tin, and zinc. After filling with liquid metal the box is set aside until the metal is sufficiently cool to be strong. The sand is then removed revealing a rough casting that, in the case of iron or steel, may still be glowing red. When casting with metals like iron or lead, which are significantly heavier than the casting sand, the casting flask is often covered with a heavy plate to prevent a problem known as floating the mold. Floating the mold occurs when the pressure of the metal pushes the sand above the mold cavity out of shape, causing the casting to fail.
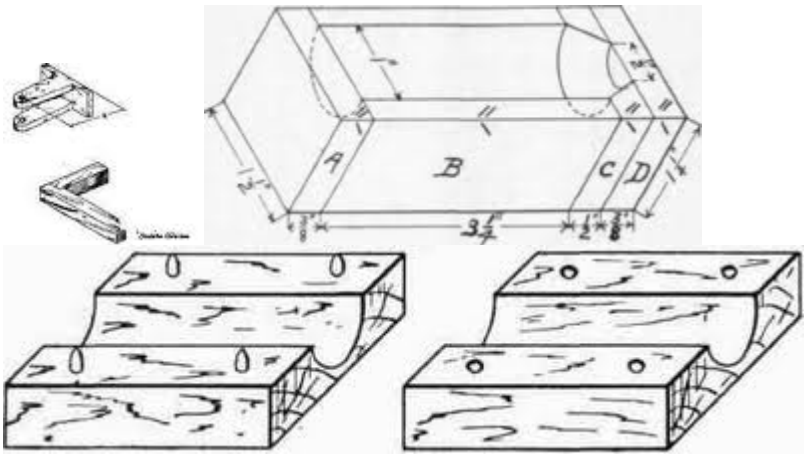
After casting, the cores are broken up by rods or shot and removed from the casting. The metal from the sprue and risers is cut from the rough casting. Various heat treatments may be applied to relieve stresses from the initial cooling and to add hardness—in the case of steel or iron, by quenching in water or oil. The casting may be further strengthened by surface compression treatment—like shot peening—that adds resistance to tensile cracking and smooths the rough surface.